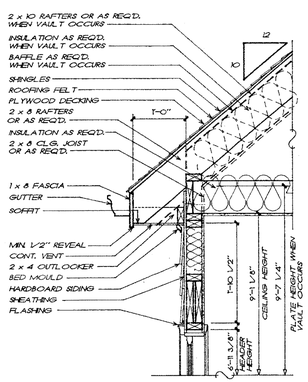

1/2 CORNICE DETAIL
3/4" = 1'-0"

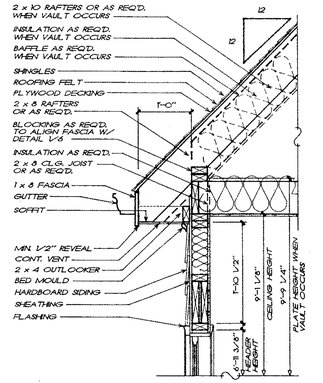

2/2 CORNICE DETAIL
3/4" = 1'-0"

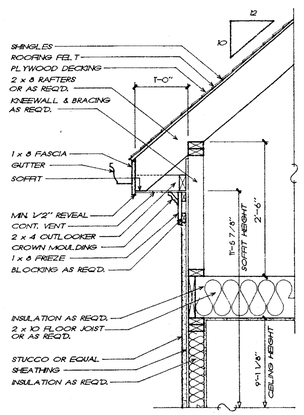

3/2 CORNICE DETAIL
3/4" = 1'-0"

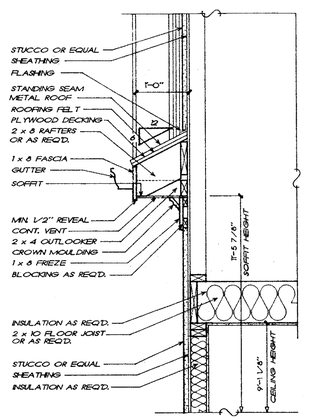

4/2 CORNICE DETAIL
3/4" = 1'-0"

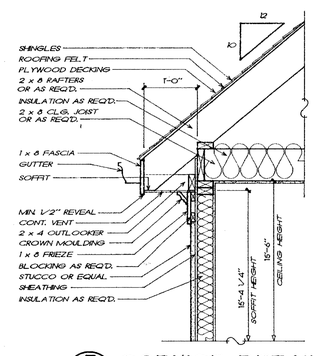

5/2 CORNICE DETAIL
3/4" = 1'-0"

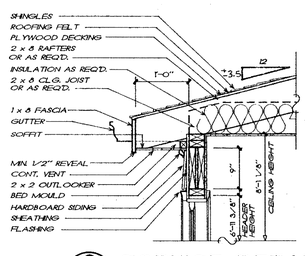

6/2 CORNICE DETAIL
3/4" = 1'-0"

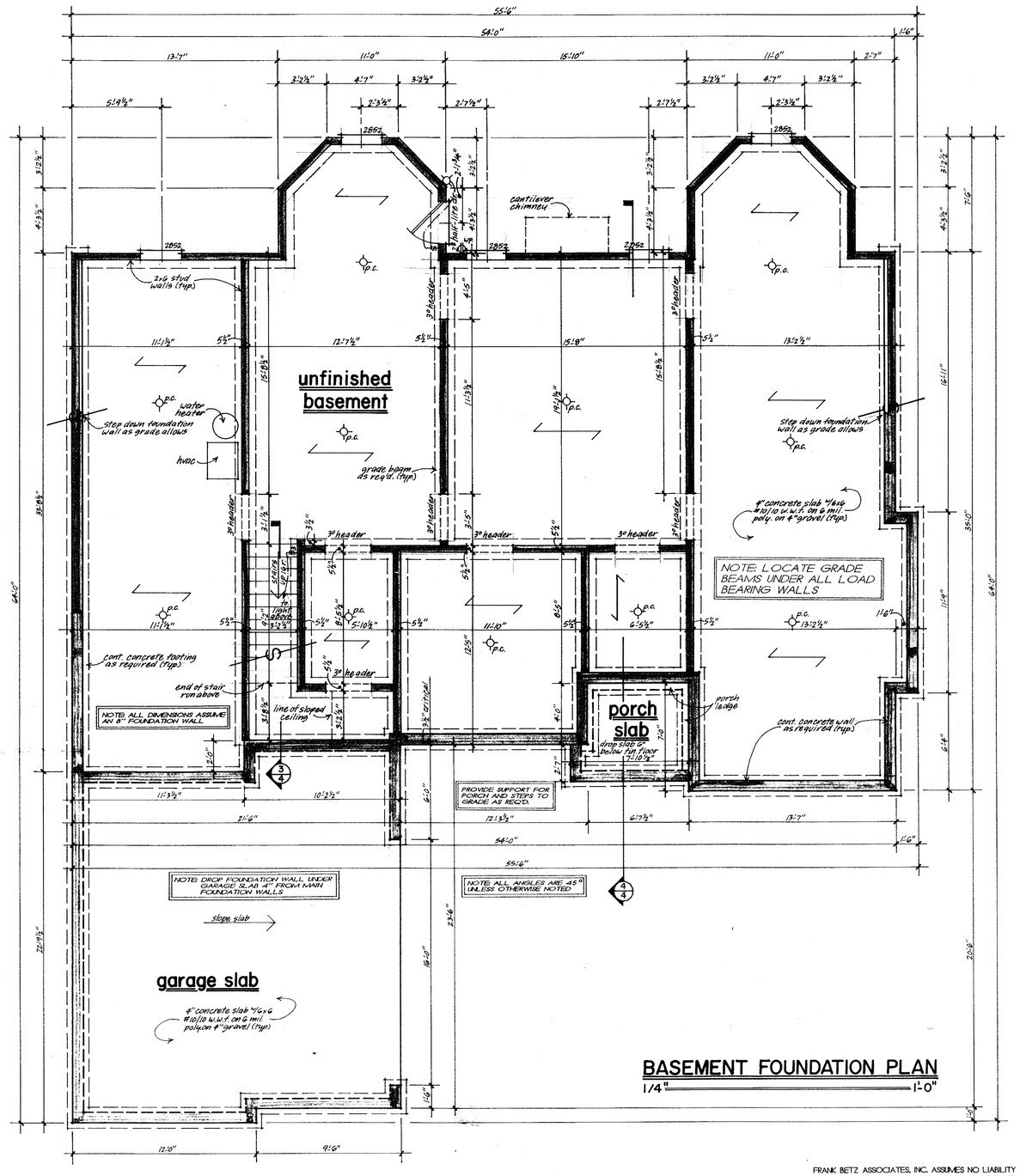

BASEMENT FOUNDATION PLAN
1/4" = 1'-0"

FRANK BETZ ASSOCIATES, INC. ASSUMES NO LIABILITY FOR ANY CHANGES OR MODIFICATIONS MADE TO THESE PLANS BY OTHERS.

REVISIONS	DATE	BY
Clar. 1/6 30	9.17.96	dcf

This drawing is not to be reproduced or used to contract any building without the written authorization of Frank Betz & Associates, Inc.

HOMEPLANS
DESIGNED FOR TODAY'S MARKET

BSMT. FOUND. PLAN/DETAILS

THE SARATOGA - B

FBA
FRANK BETZ ASSOCIATES, INC.
1800 LAKE PARK DRIVE/SUITE 101
SMYRNA, GEORGIA 30080
404/431-0888

BY: CAS CK: CGR

DATE: 5-4-95

SHEET: 2 OF: 4